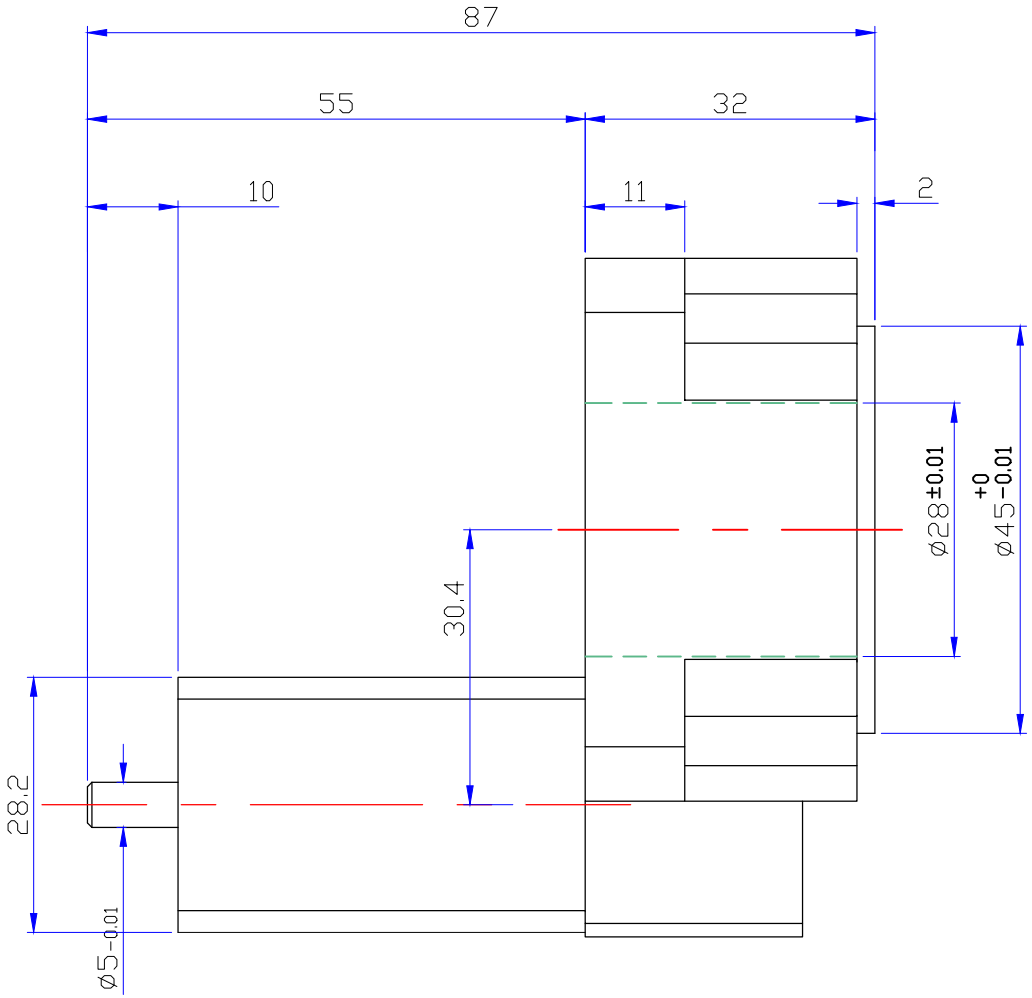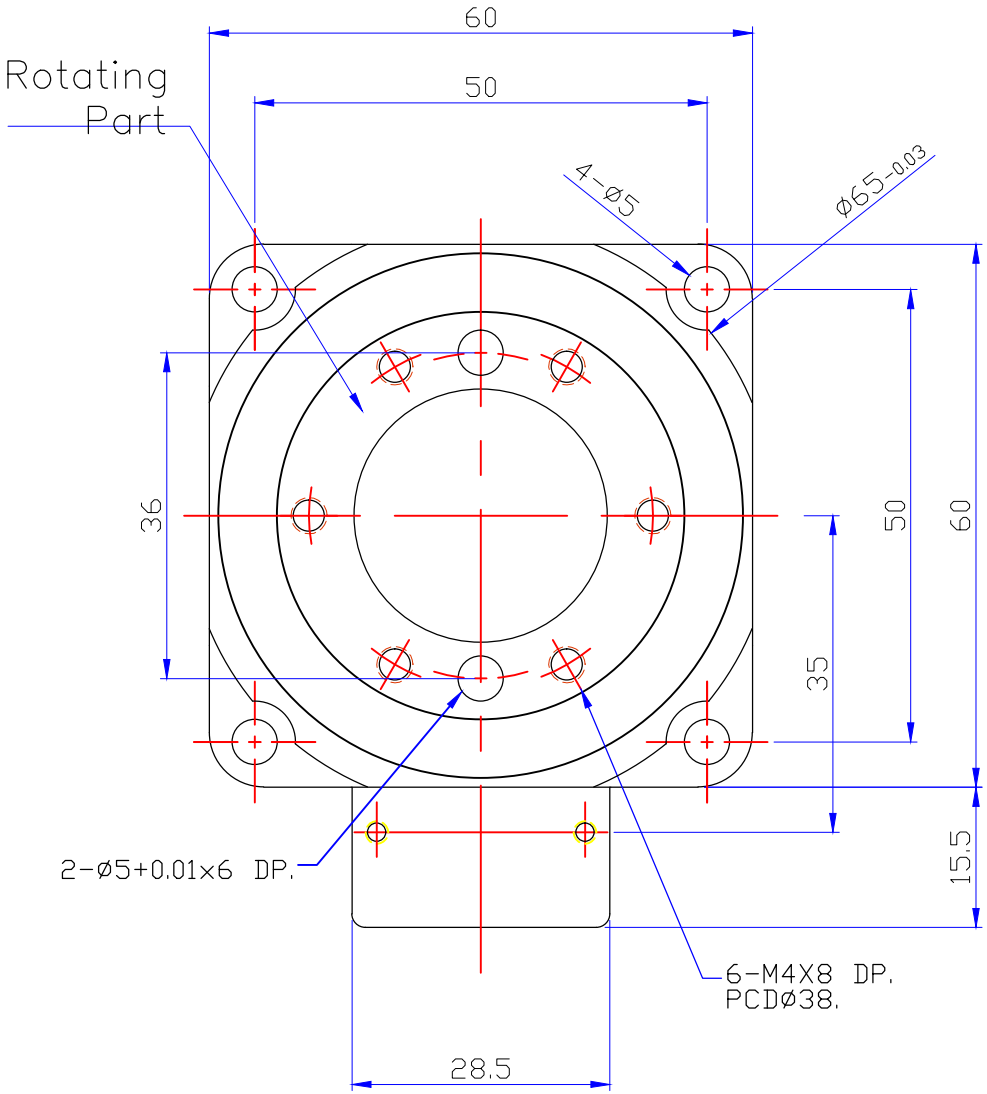HR60 Dimensions Unit(mm)